ENGINEERING TOMORROW

Data Sheet

H1 Axial Piston Tandem Pumps

Size 045/053 cm^3

For more than 40 years, Danfoss has been developing state-of-the-art components and systems for mobile machinery used in off-highway operations around the world.

We have become a preferred supplier by offering the best of what really matters: The hardware inside your vehicle application.

The H1 range is built around an advanced control and available in a wide range of displacements. It is designed for quality and reliability and offers expanded functionality, greater total efficiency, and easy installation.

All H1 control and sensor options are PLUS+1® Compliant. PLUS+1® allows you to rapidly develop and customize electronic machine control. It opens up the future by combining machine controls and diagnostics in an integrated operating network.

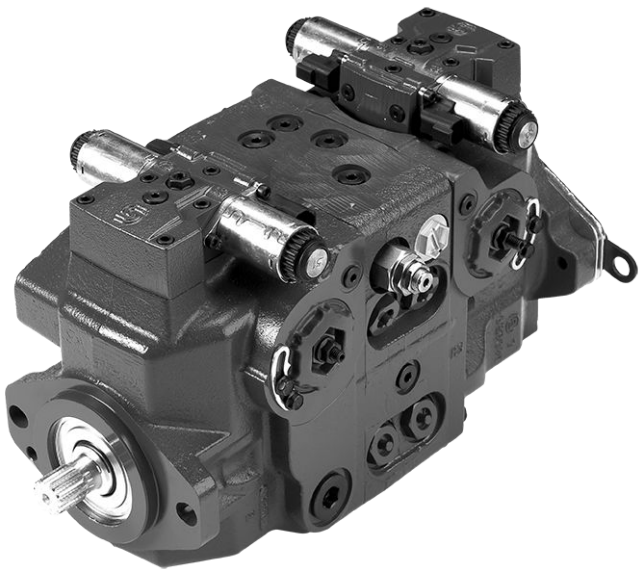

Features

Designed for quality and reliability

- One design concept
- Single piece swash plate
- Integrated auxiliary pad

Installation and packaging benefits

- Length optimized pump
- Minimum one clean side
- Higher corner HP/package size ratio
- Standardized connector interface
- High strength mounting flange

Wide range of controls

- Electro-hydraulic controls:
  - Electrical Displacement Control (EDC)
  - Forward-Neutral-Reverse (FNR)
  - Non-Feedback Proportional Electric (NFPE)
- Manual Displacement Control (MDC)
- Common control across entire family

Expanded functionality

- Full compliment of diagnostic ports including case pressure
- PLUS+1® Compliant control and sensor options
- Control Cut Off (CCO) valve with integral logic (brake) port

Greater total efficiency

- Minimized control losses
- Reduced charge pressure rise rate between idle and high idle
- Lower control pressure for less power consumption

Comprehensive technical literature online at *powersolutions.danfoss.com*

Technical Specifications

Frame size		Size 045	Size 053
Displacement cm³ [in³]		45.0 [2.75]	53.8 [3.28]
Input speed min⁻¹ (rpm)	Minimum	500	
	Rated	3400	
	Maximum	3500	
System pressure bar [psi]	Max. working*	420 [6090]	380 [5510]
	Maximum	450 [6525]	400 [5800]
	Min. low loop	10 [150]	
Case pressure bar [psi]	Rated	3.0 [40]	
	Maximum	5.0 [75]	
Weight (without PTO and filter), kg [lb]		65.0 [143.0]	

* Applied pressures above maximum working pressure requires Danfoss application approval.

Schematic

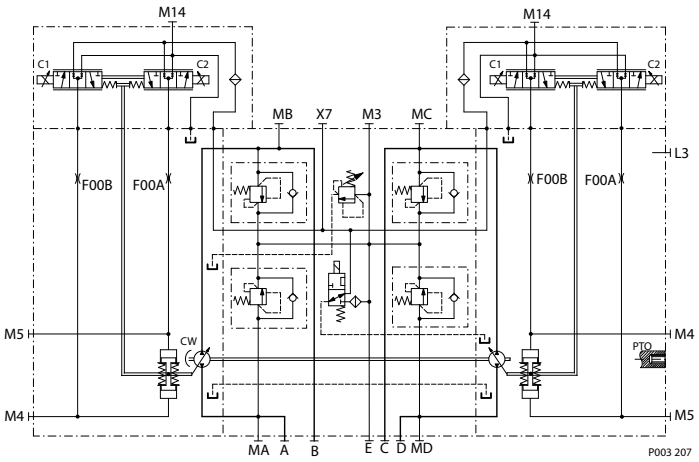

Dimensions

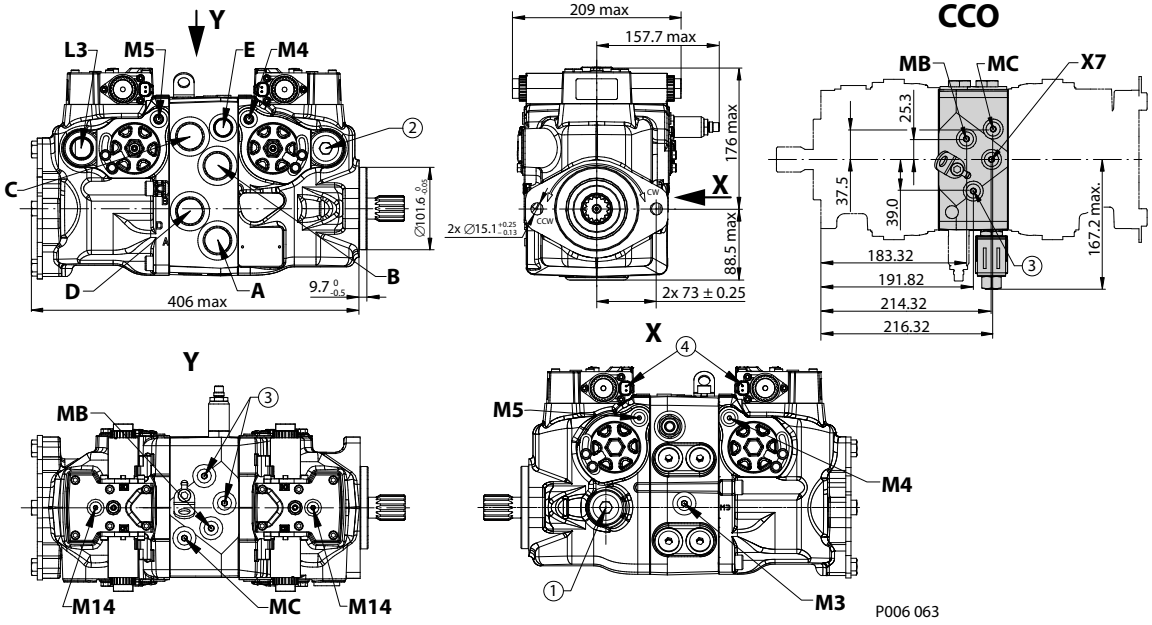

Legend:

A/B/C/D – System ports, 1 5/16-12; Ø48.5

MA/MB/MC/MD – System gauge ports, 9/16-18; Ø28

M3 – Charge gauge port, 9/16-18; Ø28

M4, M5 – Servo gauge ports, 7/16-20; Ø24.5

M14 – Case gauge port, 5/16 -24; Ø21.0

E – Charge inlet port, 7/16-20; Ø36

L3 – Case drain port, 1 1/16-12 Ø48.5

CCO – Control Cut Off valve option

X7 – Brake gauge port 9/16 -18 Ø28.0

1 – Case pressure port, 1 1/16-12 Ø41.0

2 – Case pressure port, 1 1/16-12 Ø48.5

3 – Charge constr. port, 9/16-18; Ø28

4 – Connector DEUTSCH DT04-2P

All ports per ISO 11926-1, max. clearance dia for fitting.

Danfoss can accept no responsibility for possible errors in catalogues, brochures and other printed material. Danfoss reserves the right to alter its products without notice. This also applies to products already on order provided that such alterations can be made without changes being necessary in specifications already agreed.
All trademarks in this material are property of the respective companies. Danfoss and the Danfoss logotype are trademarks of Danfoss A/S. All rights reserved.